Hardie™

6 STATION INDOOR CONTROLLER

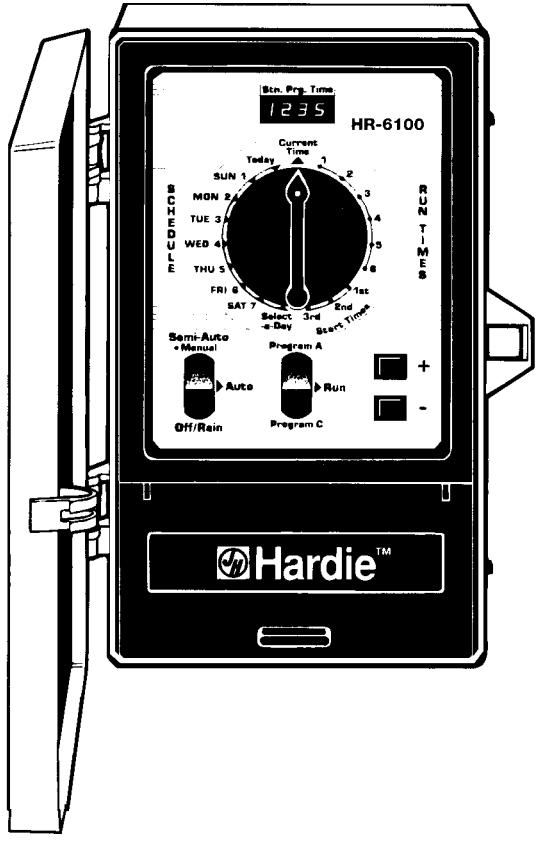

Installation and Operating Guide

MODELS HR-6100,HR-6100-l,HR-6100-l-LT

PROGRAMMING OVERVIEW

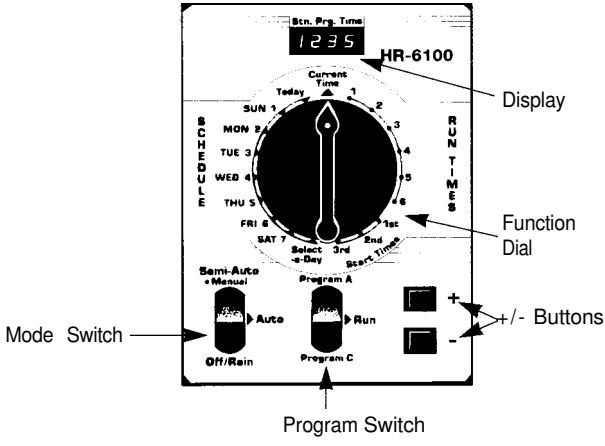

AUTOMATIC OPERATION

STEP 1: BEFORE YOU BEGIN

- Set **Mode Switch** to "Auto."
- Set **Program Switch** to desired program (A or C).
- Set **Function Dial** to 'Current Time." Set current time using +/- **Buttons.**
  NOTE: This controller is based on 24 hour "military" time (I:00 p.m. = 13:00).

STEP 2: SET HOW LONG YOU WANT TO WATER

- Set **Function Dial** to "Run Time" | and set watering (run) time.
- Repeat above procedure for "Stations" 2 through 6. Set unused stations to "00."

STEP 3: SET THE TIME YOU WANT TO WATER

- Set **Function Dial** to 1st "Start Time." Program in the time 1st watering cycle is to start. Each Start Time will water one complete 6-zone cycle.
- Repeat above procedure for 2nd and 3rd Start Times. Set unused times to "OFF" (not 0:00). To remove a Start Time, press + **Button** until 23:59, then press + once more.

STEP 4: SET THE DAYS YOU WANT TO WATER

- Set **Function Dial** to "Today". Use +/- **Buttons** to set today's number (i.e) If today is Tuesday, set the number 3 (third day of the week).
- Set **Function Dial** to "Sun. - 1" and using +/- **Buttons** set "ON" to water or "OFF" if no watering is to occur. Repeat procedure for days 2-7.
  IMPORTANT: Set 'Select-a-Day" setting to "OFF" using +/- **Buttons.** To use the "Select-a-Day" feature, refer to page 7.
- Set **Program Switch** back to "Run" and Function Dial back to "Current Time."

FEATURES & SPECIFICATIONS

FEATURES OF THE CONTROLLER

- Two separate programs, with six stations, with 3 daily start times per program.
- Each station can water from 1 to 99 minutes, allowing almost 10 hours of watering per station (using all start times and both programs). Ideal for drip irrigation.
- A seven day weekly cycle plus a "Select-a-Day" feature which allows watering day intervals from "every day" up to "once every seven days."
- Automatic, semi-automatic or true manual operation.
- Constant "Real Time" read out and station activity display for ease of monitoring.
- "Live Programming" which allows the program to be set or changed even during a watering cycle.
- A "Rain" switch which overrides all watering cycles without disturbing the program.
- Battery back-up allows the time to advance and retains your program through a power outage.
- A built-in "Fail Safe Program" which will run all six stations for 10 minutes each every 24 hours in the event that you "lose" your program.
- A handsome, rugged case which allows the use of a lock (to discourage tampering) and the use of electrical conduit.
- Master valve and/or pump start use. (Available only in the -1 model.)

SPECIFICATIONS

- INPUT = 120 VAC, 60 Hz.*
- Output = 24 VAC, at .50 amp per station max.* Use with 24 VAC, 5 VA automatic valves.
- Ambient operating temperature range: 32°F to 140°F
- Battery back-up: One 9 volt alkaline. (Supplied by user.)
- #1 amp fuse #3112001/3AG.
- FOR INDOOR USE ONLY

CAUTION: DO NOT SUBSTITUTE WITH A LARGER OR "SLOW-BLOW" TYPE FUSE!
*Foreign voltage applications may differ.

TO USE YOUR NEW CONTROLLER MOST EFFECTIVELY PLEASE READ THIS MANUAL CAREFULLY BEFORE USE AND REFER TO THE MANUAL IF ANY DIFFICULTIES ARISE.

WIRING DIAGRAM

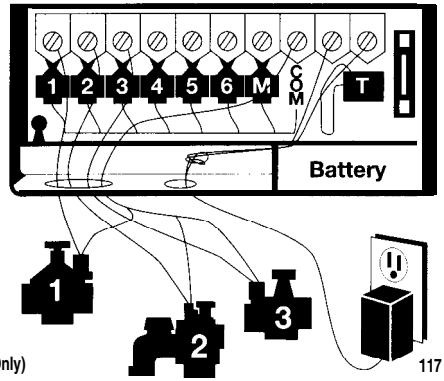

Caution: Plug transformer into receptacle only after transformer leads have been connected to terminal strip screws.

(For Indoor Use Only)

117 VAC Outlet

INSTALLATION INSTRUCTIONS

1. MOUNTING THE CONTROLLER

Install the controller and transformer indoors near an AC outlet. Once the site is chosen, drive the provided #10 screw into the wail stud, leaving about I/4" of the screw exposed. If necessary, use a toggle bolt or masonry shield.

Hang the controller from the keyhole in the back of the case. If further security is desired, two additional screws may be inserted through the holes in the lower rear corners of the controller case.

2. CONNECTING THE TRANSFORMER

CAUTION: Plug in the transformer only after the transformer leads are connected. See wiring diagram on page 2.

Open the bottom access cover and route the two transformer leads through the small hole in the bottom of the controller case. Insert one transformer lead beneath each screw then tighten both screws securely.

3. CONNECTING THE BATTERY

Connect a 9 volt alkaline battery (not included) to the battery terminal. If no battery is used, reconnect the battery terminal to the inside of the terminal strip door.

In case of a power outage, this battery will provide back-up power to retain the program and to advance the clock. (NOTE: The battery does not contain enough power to operate the valves.) A typical alkaline battery contains enough power for between 6 and 12 hours of power loss.

THE "FAIL SAFE" FEATURE: In the event a battery is not used and a power outage occurs, the controller program will be "lost." Once power is restored, a "fail safe" feature automatically returns the controller to Day 1 and the clock resumes running starting with 12:00 p.m. Then, unless the controller is reprogrammed, at 7:00 a.m. a "fail safe" program comes on and waters each station for 10 minutes every 24 hours.

4. CONNECTING THE VALVES

CAUTION: Before connecting the valves, make sure the transformer is unplugged.

Route one lead wire from each valve through the large hole in the bottom of the controller case. Insert under the screw terminal strip. The "ground" wire from each valve should be attached to a single "common" wire. Route this common wire through the large hole and connect it to the terminal strip screw labeled "COM."

NOTE: This controller is designed for use with 24 VAC, 5 VA solenoid operated valves. A maximum of two valves may be connected to any one station but no more then 3 valves (or solenoids) should be operating at any one time. This includes the master valve if one is being used. Current requirements should not exceed .32 Amp. for each solenoid.

5. CONNECTING A MASTER VALVE OR PUMP

To use a master valve which operates throughout the watering run times, simply connect one solenoid lead wire to the terminal strip screw labeled "M", and the remaining lead to the terminal strip screw labeled "COM."

NOTE: The master valve must be equipped with a 24 VAC, 5 VA solenoid. If a pump is to be used, connect a relay lead to the same terminal used for the master valve connection. The pump relay should have a nominal coil voltage of 24 VAC at ,254 Amps maximum.

CAUTION: If you are using a pump start and pump start circuit, the "fail safe" progrram will activate the pump for each of the six stations for 10 minutes each. If less than six stations are being used, the pump will be running against a "dead head" on each unused station. This can damage the pump. To avoid this, simply connect a jumper wire from the unused station's terminal over to a station terminal that is being used.

THE DISPLAY

NOTE: The controller is based on 24 hour "Military Style" time. Hours O-11 are A.M.; hours 12-23 are P.M.
The display always indicates the current time unless a station or program is on. See illustrations below. After there has been a power outage or after the transformer has just been plugged in, the display will flash as 12:00 p.m. or the current time, depending on how long the outage was. To stop the display from flashing, just press the +/- Buttons.

INFORMATION DISPLAYED WHEN CONTROLLER IS RUNNING

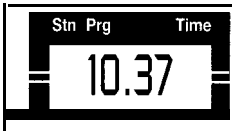

AUTOMATIC OPERATION WITHOUT PROGRAM ON.
Shows current time with "dot" flashing. If entire display is flashing, controller has just been plugged in or there has been a power outage.

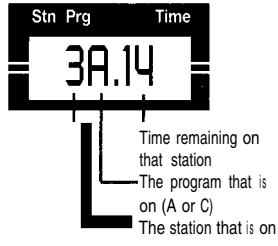

AUTOMATIC (OR SEMI-AUTO) OPERATION **WITH** PROGRAM ON.
"Dot" will be flashing.

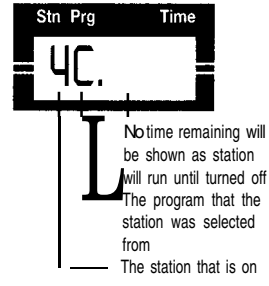

MANUAL OPERATION
"Dot" will be flashing.

INFORMATION DISPLAYED WHEN PROGRAMMING CONTROLLER

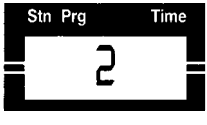

"TODAY" SETTING
Displays day numbers "l-7" under Time.

"DAY" SETTINGS: SUN.-I THROUGH SAT.-7 INCLUDING SELECT-A-DAY.
Drsplays "On" or "Off" under Stn. and Prg.

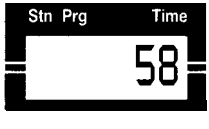

"RUN TIME" SETTINGS:
STATIONS **1-6**
Displays "00-99" in one-minute increments under Time.

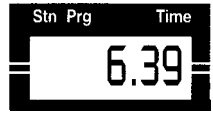

"START TIME" SETTINGS: TIMES **1-3**
Displays times "0:00-23:59" and also displays "Off" if a start time isn't needed.

CONTROL DESCRIPTIONS

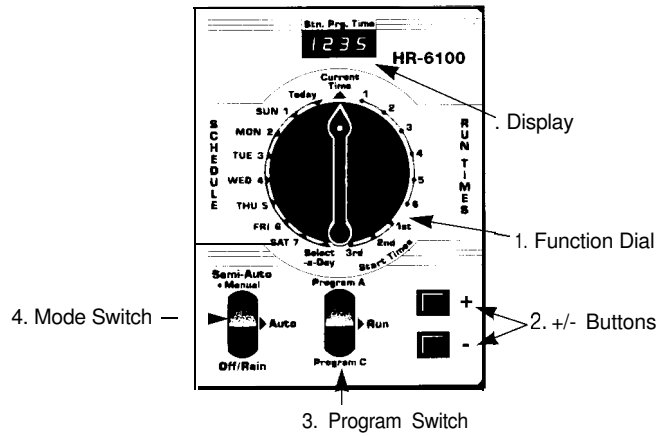

1. THE FUNCTION DIAL

This is used to set, check or change all program information. It is used in conjunction with the +/- **Buttons** and **Program Switch (see** below). The **Function Dial** is also used whenever a station is to be turned on manually. The **Function Dial** should always be returned to the "Current Time" position after the programming, checking, or manual operation is finished.

2. THE +/- BUTTONS

This is used with the **Function Dial** and **Program Switch to** set or change all program information. By tapping either end of the Buttons, the information will change by single digits or words (On/Off). The display will show the changes. By holding down either end, the information will change in a two step process, At first, the information will change at a rate of 4 characters per sec., then at a rate of 12 characters per sec.

3. THE PROGRAM SWITCH

This switch is used with the **Function Dial** and +/- **Buttons** to set, check or change all program information, and with the **Mode Switch** to operate the controller semi-automatically or manually. Its normal position is the "Run" setting. In this setting, the controller waters only automatically according to the program schedule. The program cannot be checked or changed, or operated manually or semi-automatically.

The controller has the capacity to store and operate two separate programs (called A and C). Use "A" for your main and primary program, and "C" for any alternate programming.

To set, check or change information, the **Program Switch** must be set to either the A or C position (depending upon which you're using). When operating a program semi-automatically or manually, set the switch to the appropriate setting (A or C).

NOTE: Controller will operate all programs regardless of switch position.

4. THE MODE SWITCH

This switch has 3 positions:

1, **Semi Auto/Man** — Used to start the controller semi-automatically or manually.
   a. Semi-Automatic: Turns on a watering cycle regardless of watering days or cycle start times.
   b. Manual: Turns on indefinitely any selected station regardless of programmed information.
2. Auto — The normal setting for automatic operation.
3. Off/Rain — Used to override any programmed watering cycle, or to stop a cycle or station while it's running. The programmed information is still retained in this setting and the current time keeps running.

FUNCTION DESCRIPTIONS

DAY SETTINGS

These 9 settings control on what days watering is to occur. The watering day schedule can be set in two ways: 1) As a 7 day weekly cycle, where watering corresponds to actual days of the week or 2) As a "Select-a-Day" cycle where watering occurs at specific intervals regardless of actual days of the week (i.e., switch position #3 will water every 3rd day). You may set each program on the same schedule or entirely different schedules (i.e., Program A = Sun. Tues. Fri.; Program C = Every 5th day). Each day of the week is assigned a number (l-7). All day settings (except "Today") are programmed as "Off" or "On." When a day is programmed "Off", no watering will occur in that 24 hour period. When it is programmed "On", watering occurs according to the programmed start and run times. When setting "Today" you will set the number that corresponds to today's actual day (i.e., Tues = 3).

NOTE: "Today" can only be set with the **Program Switch** in the "A" position.

START TIME SETTINGS

NOTE: One start time waters once a day.

These 3 settings control at what time of day a watering cycle is to start. Up to 3 different daily start times are available for each program (for a total of 6 start times per day). This, combined with the short run time ability is ideal for newly seeded lawns.

NOTE: If a watering cycle is set to start at a late evening hour, the controller will finish that cycle even if it runs into the next day.

RUN TIME SETTINGS

These six settings control how long each valve (or "station") will water (or "Run"). Each setting corresponds to one of the six valve terminals. (A maximum of 2 valves may be wired to any one terminal.) Each "station" can be set to run from 1-99 minutes in one minute increments. When watering is finished at one station, it will shut off and the next station or valve will come on.

AUTOMATIC OPERATION

This Controller has the capability of running two separate programs called (A and C). Use program "A" for your primary or main watering schedule and program "C" for areas that require special attention. If desired, programs A and C can water at the same time (not to exceed 3 valves at .32 Amps each.)

PROGRAMMING INVOLVES JUST 3 MAIN STEPS:

1. Setting what days you want watering to occur
2. Setting the time(s) you want the program to start
3. Setting how long you want to water each area (or station)

REFERENCE CHAR1r

Clock Time	Military Time	Clock Time	Military Time	Clock Time	Military Time
1:00 A.M.	1.00	9:oo	9.00	5:00	17.00
2:oo	2.00	10:00	10.00	6:00	18.00
3:oo	3.00	11:00	11.00	7:oo	19.00
4:oo	4.00	12:00 NOON	12.00	8:00	20.00
5:00	5.00	1:00 P.M.	13.00	9:oo	21.00
6:00	6.00	2:oo	14.00	lo:oo	22.00
7:oo	7.00	3:oo	15.00	11:00	23.00
8:00	8.00	4:oo	16.00	12:00 MIDNIGHT	0.00

BEFORE YOU BEGIN PROGRAMMING

1. Set the **Mode Switch** to the "Auto" position.
2. Set the **Program Switch** to the desired program (A or C).
3. Set the **Function Dial** to the "Current Time." Then, using the +/- **Buttons,** set the current time. **NOTE:** This controller is based on a 24 hour "Military Style" clock. Hours O-11 are A.M.: hours 12-23 are PM. (See Reference Chart, page 6.)

SETTING THE DAYS YOU WANT WATERING TO OCCUR

NOTE: This controller has the capability of two types of watering cycles: One waters on specific days of the week. The other waters at specific intervals.

TO WATER ON SPECIFIC DAYS OF THE WEEK:

IMPORTANT: Set the Select-a-Day setting to "OFF"

1. Each day of the week is assigned a number starting with Sunday = 1 through Saturday = 7.
2. Set the **Program Switch** to 'A."
3. Set the **Function Dial** to "Today." Then using the +/- **Buttons,** set today's number. (i.e., If today is Tuesday, set the number 3.)
4. Set the **Program Switch** to the desired program (A or C).
5. Set the **Function Dial** to Sun-l and set "ON" if watering is to occur on this day or "OFF" if watering is not to occur.
6. Follow the above procedure for days Mon-2 through Sat-7.

TO WATER EVERY "SO MANY" DAYS:

IMPORTANT: Set the Select-a-Day setting to "ON."

1. Determine the watering interval you wish (i.e., Every 2nd day, every 3rd day, etc.). 1 = Every day, 2 = Every other day, 3 = Every third day, and so on.
2. Set the Function Dial to the corresponding day number and set that day to "ON." (i.e., If you want to water every 3rd day, set the Selector to Tue.-3. Ignore the day of the week; go by the number only.)
3. Set all other days/numbers to "OFF." If more than one day is set to "ON", the Select-a-Day program will go by the smallest numbered day and will disregard all others.
4. Return the Function Dial to the Today setting. Determine where in the watering cycle "Today" is and program in that number.

SETTING THE TIME(S) YOU WANT THE PROGRAM TO "START"

The controller can start a complete watering cycle up to 3 times for each program during the same day.

1, Set the Function Dial to the number 1 beside "Start Time." Using the +/- Buttons, program in the time you want your 1st watering cycle to start.
REMEMBER: The controller uses a 24 hour "Military Style" clock.
2. Repeat the above procedure for the 2nd and 3rd start times. If you don't need three cycles per day, set the unused start times to "OFF" (Not 0.00, which represents midniaht.) To remove a Start Time. Dress the + **Button** until 2359, then press + one more time. Display will read "OFF."

SET HOW LONG YOU WANT TO WATER EACH AREA (OR STATION)

This is called "Run Time." There are 6 zones or valve "stations" available, with each capable of watering from 1 minute up to 99 minutes (per start time). If you are not using all 6 stations, set any unused stations to read "0.00."

1. Set the **Function Dial** to the number 1 beside "Run Time" and use the +/- Buttons to set the watering (run) time.
2. Repeat the above procedure for "stations" 2 through 6.

Now simply set the Program Switch back to "Run", the Funtion Dial back to "Current Time" and you're done! If you desire an additional separate program, set the Program Switch to C and repeat all of the above programming steps.

USING DUAL PROGRAMMING

This controller has the capacity for operating two separate watering schedules (or programs). They are designated as "A" and "C." Program your watering schedule for your main lawn or planting areas using Program "A." For areas that require a special watering schedule, use Program "C."

PROGRAM A	PROGRAM C
Main Lawns + Planters Sunny + Dry Area Regular Sprinklers Established Lawns	Special Planting Areas Shady + Cool Areas Drip Irrigation New Lawns

EXAMPLE OF DUAL PROGRAMMING:

EXAMPLE

Stations 1 through 4 control sprinklers on lawn areas and stations 5 and 6 control drip irrigation on landscaping areas around the front and back of the house. The lawn needs to be watered once a day starting at 6:00 a.m. for 12 minutes. The drip irrigated areas need to be watered Monday, Wednesday and Friday for 90 minutes starting at 2:00 p.m.

TO PROGRAM THIS

1. Set the current time of day and "Today" according to the program instructions.
2. Move the **Program Switch** to Program A. For Program A (the sprinkler program) set each day of the week to ON by moving the dial to each day position and set it to ON. Be sure to set Select-a-Day to OFF Then set the Run Time for each station (l-4) to 12 minutes. Set Stations 5 and 6 to 00 minutes. Turn the dial to Start Time 1 and set to 6 a.m. Start times 2 and 3 should be set to OFF
3. Move the **Program Switch** to Program C. For Program C (the drip irrigation program) set Monday, Wednesday and Friday to "ON" and all other days of the week to "OFF." Be sure to set Select-a-Day to "OFF." (Note: When using dual programming, if Select-a-Day is "OFF" for both programs, setting "Today" is only possible in Program A). Now set the drip irrigated stations Run Times 5 and 6, to 90 minutes. Stations 1 through 4 should be set to 00 minutes. Turn the dial to Start Time 1 and set to 14:00 (2:00 p.m.) and be sure to set Start Times 2 and 3 to OFF Move the Program Switch to Run and Mode Switch to Auto and it's all set!

TO CHECK YOUR PROGRAM:

Simply set the Program Switch to the appropriate program to be checked and using the Function Dial set it to the function to be checked.

NOTE: The program cannot be checked if the **Program Switch** is in the "Run" Position.

SEMI-AUTOMATIC & MANUAL OPERATION

This type of operation enables a complete programmed watering cycle to be started at any time regardless of the programmed "ON/OFF" days or start times. Use it if an extra watering cycle is desired, say on an especially hot or dry day. Semi-Auto will run through a complete cycle from Station 1 through to Station 6. Upon completion of the cycle, the controller will return to the programmed automatic schedule.

TO USE THE SEMI-AUTO FEATURE:

1. Leave the **Function Dial** in the "Current Time" setting.
2. Set the **Mode Switch** in the "Semi-Auto" position.
3. Set the **Program Switch** to the position that contains the desired watering cycle (Prcgram A or C).
4. Set the **Program Switch** back again to the "Run" position, then simply set the **Mode Switch** back to the "Auto" position.
5. The display will show the appropriate station number, program letter (A or C) and the time remaining on that station.
6. When the cycle is complete, the controller automatically returns to the Automatic program.

MANUAL OPERATION

This type of operation enables any station to be operated at any time regardless of the programmed schedule. That specific station will then "Run" indefinitely until it's turned off manually by the user. The controller will then return to the programmed schedule and begin watering again at the next scheduled start time and on the next ON day.

TO TURN A STATION ON:

1. Set the **Function Dial** to the desired station number.
2. Set the Mode **Switch** to the manual position.
3. Set the **Program Switch** to "Program A", then switch it right back to the "Run" position.
4. The display will now show the station number in operation followed by the letter A for program A (although that specific program has no bearing on the manual operation).

TO TURN THE STAT/ON OFF:

1. Set the **Mode Switch** to the "Off/Rain" position and then back to the "Auto" position.
2. Set the **Function Dial** back to "Current Time."
3. The station is now off and the display will show the current time. The Controller is back on the programmed schedule again with no loss of time.
   NOTE: Since the Controller has two separate and independent programs (A or C), it has the capability of running one station manually in one program, while at the same time running a complete cycle (auto or semi-auto) in the other program. You can also run two stations manually, one in each program.

WATERING TIPS

HOW MUCH TO WATER

During hot weather most lawns require approximately 1/2" of water every other day. For clay soils, hard packed areas or slopes, daily watering of 1/4" is preferred to reduce puddling and run-off. Since weather and soil conditions vary region to region, consult your local nurseryman or landscaper for more specific recommendations.

HOW LONG TO WATER

To determine how long it takes your particular sprinkler system to discharge the required amount of water, place a number of large flat bottomed pans at different locations around your lawn and turn on your system. After it has run for awhile, measure the water depths in the different pans. This method will give you an approximation of the time versus discharge for your system.

WHEN TO WATER

Early morning is the best time of day for watering as evaporation, wind drift and temperatures are minimal. Evening watering is less desirable due to the possibility of mildew and fungus growth as the lawn sits wet overnight.

TROUBLE-SHOOTING GUIDE

PROBLEM	POSSIBLE CAUSE	CORRECTION
Valves don't operate	Position switch on "Rain" Solenoid defective Loose wire connection Proper day setting Off	Position mode switch to "AUTO. Test and replace if necessary. Secure wire connections. Check for continuity. Check current day in display. Set Function Dial to correct day and check to see if it is programmed "ON."
Valves open at strange times	Current time of day out of synchronization First, second or third start time needs checking	Check and reset current time. Check and reset first, second an third start times.
Program won't **display**	No power at wall plug Transformer partially pulled out of wall receptacle In wrong mode Controller is in watering cycle Blown fuse	Checkhouse current, fuse, or circuit breaker. If transformer is loose in plug, spread blades slightly, push transformer into receptacle firmly Program switch must be in run mode. Check or change program when controller is out of watering cycle Replace fuse and check valve wiring or solenoid for short.
Display is not reading correctly after a power-outage or after being plugged in.	Back-up battery is weak or no battery is being used	Unplug transformer and battery for 1 minute. Then replace battery, plug transformer back in and reprogram.
Haters on a day when not scheduled	Individual day or Select-a-Day schedule improperly programmed	Reprogram, referring to Control Descriptions and instruction for correct procedure.
Current time of day s wrong time	Power outage occurred with no batteries or dead batteries used in the controller	Reset current time of day. If upon checking watering times they are different than previously programmed, reprogram controller. Check and replace batteries.

WARNING: DO NOT LINK TWO OR MORE CONTROLLERS VIA A COMMON TRANSFORMER OR COMMON WIRE.

This equipment has been tested and found to comply with the limits for a class B digital device, pursuant to Part 15 of the FCC Rules.
These limits are designed to provide reasonable protection against harmful interference in a residential installation. This equipment generates, uses and can radiate radio frequency energy and if not installed and used in accordance with the Instructions, may cause harmful interference to radio communications. However, there is no guarantee that interference will not occur in a particular installation. If this equipment does cause harmful interference to radio or television reception, which can be determined by turning the equipment off and on, the user is encouraged to try to correct the interference by one or more of the following measures:

- Re-orient or relocate the receiving antenna.
- Increase the separation between the equipment and receiver.
- Connect the equipment into an outlet on a circuit different from that to which the receiver is connected.
- Consult the dealer or an experienced radio/IV techniclan for help.

This equipment has been verified to comply with the limits for a class B computing device, pursuant to FCC Rules. In order to maintain compliance with FCC regulations, shielded cables must be used with this equipment. Operation with non-approved equipment or shielded cables is likely to result in interference to radio and TV reception.
The user is cautioned that changes and modifications made to the equipment without the approval of manufacturer could void the user's authority to operate this equipment.

Este equipo ha sido puesto a prueba y ha obrado de acuerdo a los limites de un aparato digital de clase B, de acuerdo a la Seccion 15 de las Reglas del FCC. Estos limites estan disenados a fin de proveer una proteccion razonable contra interferencias nocivas en instalaciones residenciales. Este equipo genera, utiliza y tiene la capacldad de irradiar energia de frecuencia radial, y si no es instalado y utilizado de acuerdo a las instrucciones suministradas puede causar interferencia perjudlcial a las comunicaciones radiales. Sin embargo, no hay garantia de que esto no ocurra en una instalacion dada. Si este equipo causa interferencia perjudicial a la recepcion de radio o television, la cual se puede comprobar simplemente prendiendo y apagando el equipo, el consumidor puede tratar de corregir la interferencia de una de las formas siquientes:

- Relocalize la antena receptora o cambie su orientation.
- Aumente la distancia entre el equipo y el receptor.
- Conecte el equipo en un enchufe de circulto diferente de aquel del receptor.
- Consulte con el vendedor, distribuidor o con un tecnico de radio/television.

Este equipo se ha verifiqcado que obra de acuerdo a 10s limites de un aparato computador de clase B, de acuerdo a las Reglas del FCC. A fin de mantenerse de acuerdo a las regulaciones del FCC, 10s cables que se utilicen con este equipo deberan estar debidamente protegidos. La operaclon con un equipo que no haya sido previamente aprobado o con cables sin debida protecclon podra resultar en interferencia en la reception de radio o television. Al consumidor se ie avisa que cualquier cambio o modificaclon que se le haga al equip0 sin la previa aprobacion de fabricante podar anular la autoridad del consumidor para operar este equipo.

James Hardie Irrigation offers an entire family of products for commercial and residential applications:

Controllers and Controller Accessories

Valves and Valve Accessories

Rotors, Sprayheads, and Nozzles

Micro (Drip) Irrigation Components

James Hardie Irrigation

Product Inauiries
27631 La Paz Road
Laguna Niguel, CA 92677

Manufacturing
9455 Railroad Drive
El Paso, TX 79924

P/N 903501, **Rev.** A

© 1996 James Hardie Irrigation