G13•001•03	Rolls-Royce Silver Spirit Silver Spur	**Bentley** Mulsanne Mulsanne Turbo Eight

Hydraulics and Braking System
Foot Operated Parking Brake Front Cable

Car serial number

Silver Spirit & Bentley Mulsanne
SCAZS0000ACH01001 to 27798

Silver Spur
SCAZN0000ACH01006 to 27780

Bentley Mulsanne Turbo
SCBZS0T00CCH04233 to 27793

Bentley Eight
SCBZS8004ECH08862 to 27799

Parts marked thus ✻ refer to Additional Information below ◁ **Left-hand** ▶ **Right-hand**

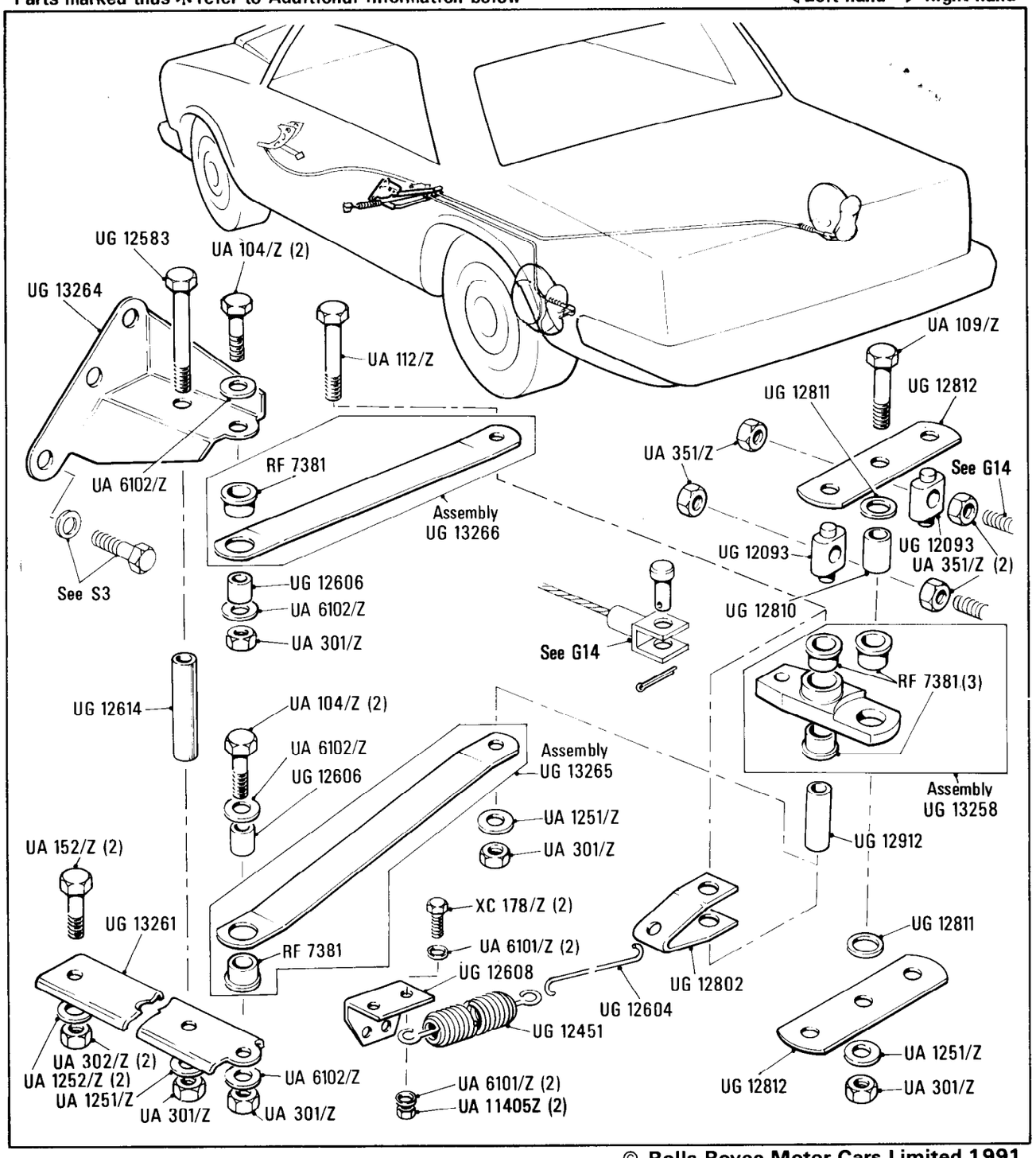

Additional Information

© Rolls-Royce Motor Cars Limited 1991